P 22-32 / 82-98

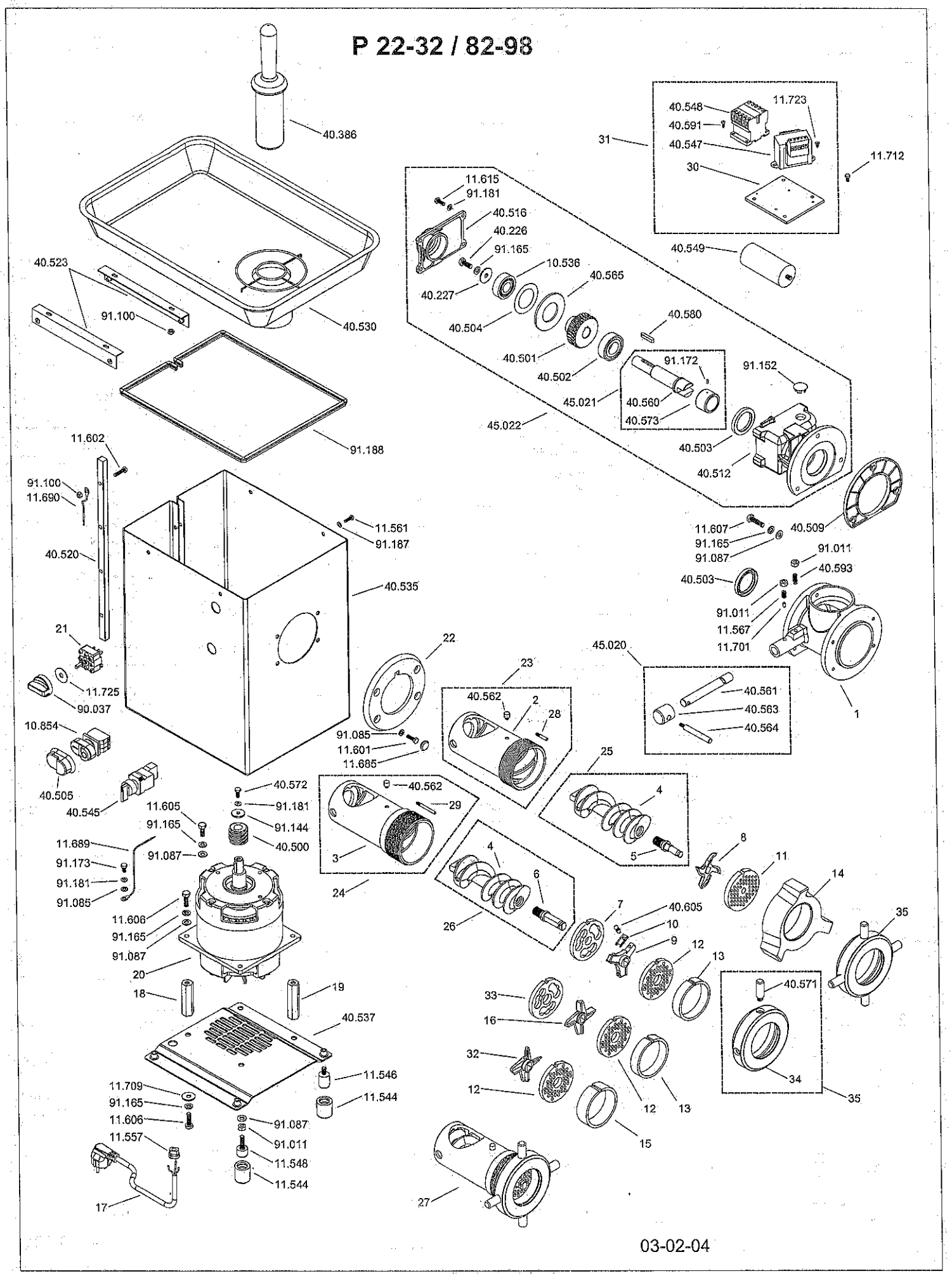

03-02-04